Tulsi Fire™ **Neha-Tech Industries**

JAIPUR HEAD OFFICE
Office No. 206, Metropolis Tower, Ajmer Road, Jaipur, Rajasthan-302019

JAIPUR WORKS
Plot No. G-29, RIICO Industrial Area, Bagru (Extn.)-Jaipur, Rajasthan-303007

DELHI WORKS
S2 / C-23, Anand Parbat Industrial Area, New Main Rohtak Road, New Delhi-110005

E-mail
info@tulsifires.com | nehatech29@gmail.com

PRIDE IS OUR DUTY

Tulsi Fire™

SAVE LIFE
SECURE QUALITY
SERVE ON TIME

visit us at:
www.tulsifires.com

CATALOG 2023

About us

We would like to introduce our company as a manufacturer of Tulsi Fire Equipments where we had started our business of Fire Hoses, year 2007 it was established and started production from year 2009. The company is located at G-73, RIICO Industrial Area, Bagru (Extn.),Jaipur-Rajasthan which one of the tourist place.

After couple of years we created another unit in 2012, situated at G-29, RIICO Industrial Area, Bagru (Extn.), Jaipur-Rajasthan, sprawling along 50000 sq ft area. We started manufacturing all the ranges of Fire Hoses blended with modern technology and fabricated by highly efficient machine which could produce premium quality product. We have in house production investment casting & fabrication.

LIST OF PRODUCT MANUFACTURED

- **Hoses**
  Rubber Lined IS: 636 Type - 1
  Rubber Lined IS: 636 Type - 2
  Rubber Lined IS: 636 Type-3
  Controlled Percolating IS : 8423
- **Couplings (IS: 903)**
  Stainless Steel
  Gun Metal
  Aluminum
- **Short Branch Pipe & Nozzles (IS: 903**
  Stainless Steel
  Gun Metal
  Aluminum
- **Landing Valve (IS: 5290)**
  Stainless Steel | Gun Metal
- **Fire Hose Cabinet**
  Single | Double
- **First Aid Hose Reel Drum Set**
  Indian Standard (IS: 884)
  Malayasian Type
  Compact Type
- **Fire Extinguisher (IS: 15683)**
  Powder Type - (ABC/DCP) Co2 Type
  Mechanical Foam Type Water Type
- **Fire Inlet Breeching (two/ Three/ Four)**
  NRV-Stainless Steel/Gun Metal
- **Fire Man Axe**
- **Sprinkler & Flexible Hose**
- **Fire Bucket with Stand**
- **Air Release Valve**
- **Drowout Connection**
- **Multipurpose Nozzle**

Approval & Certifications

IS : 636	IS : 8423	IS : 903	IS : 5290	IS : 15683:2006	IS : 884
TYPE-I&III	CP HOSE				
CM/L-2721046	CM/L-2725963	CM/L-8400210359	CM/L-8400178315	CM/L-8400210006	CM/L-8400210360

Our Major Clients

Fire Hose

Tulsi Silver Rubber Lined Fire Hose : NTI-FH-TS

Diameter		Bursting Pressure		Working Pressure	
mm	inch	bar	psi	bar	psi
25	1	60	870	18	260
38	1 1/2	60	870	18	260
45	1 3/4	60	870	18	260
52	2	55	800	17	250
65	1 1/2	55	800	17	250
70	2 3/4	55	800	17	250

IS : 636 : 2018
TYPE-I
CM/L-2721046

- Premium quality Rubber lined Single Jacket Hose
- Circular woven Jacket made up of 100% Polyester yarn
- Light and Flexible, Sea Water and Weather Resistant, Ageing and Ozone Resistant
- ISI Marked
- Conforming to BS 6391:2009 Type 1
- High Quality Synthetic EPDM Rubber Lining

Tulsi Silver Extra Rubber Lined Fire Hose: NTI-FH-TSE

Diameter		Bursting Pressure		Working Pressure	
mm	inch	bar	psi	bar	psi
25	1	60	870	18	260
38	1 1/2	60	870	18	260
45	1 3/4	60	870	18	260
52	2	55	800	17	250
65	1 1/2	55	800	17	250
70	2 3/4	55	800	17	250

IS : 636 : 2018
TYPE-II
CM/L-2721046

- Designed for Aggressive Fire Fighting Applications
- Circular woven Jacket made up of 100% Polyester yarn
- High Quality Synthetic EPDM Rubber Lining
- Heat and Abrasion Resistant
- Conforming to BS 6391:2009 Type 2
- Available Colors - Red, Yellow, Blue, Orange, Green, Black
- External Coating of specially formulated Synthetic Elastomer
- ISI Marked

Fire Hose

Tulsi Fireprotect Rubber Lined Hose : NTI-FH-TFP

Diameter		Bursting Pressure		Working Pressure	
mm	inch	bar	psi	bar	psi
25	1	60	870	18	260
38	1 1/2	60	870	18	260
45	1 3/4	60	870	18	260
52	2	55	800	17	250
65	2 1/2	55	800	17	250
70	2 3/4	55	800	17	250

IS : 636 : 2018
TYPE-III
CM/L-2721046

- Heavy Duty Fully Extruded "Thru-the-Weave" Delivery Hose
- Resistant to Oil, Fuel & Chemicals, Resistant to Kink
- ISI Marked
- 100% High Tenacity Polyester / Polyamide Circular Woven Reinforcement
- Ribs on External Cover provides very high Abrasion Resistance and Ease of Handling
- Conforming to BS 6391:2009 Type 3
- Extremely Long Service Life
- Embedded in a high quality special grade of Nitrile / PVC Rubber Compound
- Maintenance Free & Easy to Repair
- Available Colors - Red, Yellow, Blue, Black

Tulsi Cool Controlled Percolating Fire Hose : NTI-FH-TC

Diameter		Bursting Pressure		Working Pressure	
mm	inch	bar	psi	bar	psi
25	1	60	870	18	260
38	1 1/2	60	870	18	260
45	1 3/4	60	870	18	260
52	2	55	800	17	250
65	2 1/2	55	800	17	250
70	2 3/4	50	725	16	235

IS : 8423
CP HOSE
CM/L-2725963

- Forestry Light Weight, Self-Protecting, Attack Hose
- Circular woven Jacket made up of 100% Polyester yarn
- Flame Resistant
- Smooth Rubberized Water Way for Uniform Controlled Percolation and Even Wetting
- Also used in for Irrigation, Bush Fires any other Unmanned Areas.
- ISI Marked

Short Branch Pipe : Instantaneous Coupling

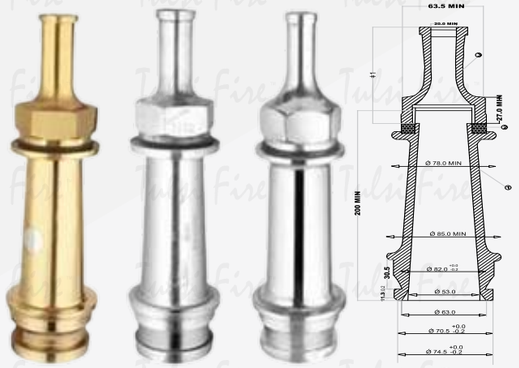

Tulsi Fire Short Branch Pipe : NTI-SBP-TFSBP

Technical Specifications

Size of Branch Pipe : 63mm
Size of Nozzles : 6mm, 12mm, 15mm, 20mm, 25mm,
Material : Gun Metal / Stainless Steel/Aluminium Alloy
Conforming Specification : IS : 903, ISI Marked
Hydrostatic Test (body Test) : Tested At 21 Kgf/cm
Working Pressure: 7 Kg / cm
Range : 38mm, 52mm
FINISH :- Natural Polished
Hologram : Sticker Stuck On Branch Pipe

Gun Metal • Aluminum Metal • Stainless Steel • Drawing

IS : 903
CM/L-8400210359

No	Description	Material	Specification	Qty.
1.	Nozzle	Bronze Stainless Steel	IS : 318 LTB-II SS-304/316	1
2.	Washer	Bronze Stainless Steel	IS : 937	1
3.	Body	Bronze Stainless Steel	IS : 318 LTB-II SS-304/316	1

Tulsi Fire Hose Delivery Coupling : NTI-CP-TFIC

IS : 903
CM/L-8400210359

TECHNICAL SPECIFICATIONS

Size : 63mm
Material : Gun Metal / Stainless Steel/Aluminium Alloy
Conforming Specification : IS : 903, ISI Marked
Hydrostatic Test (body Test) : Tested At 21 Kgf/cm
Working Pressure: 5 To 14 Kg / cm
Range : 38mm, 52mm, & 70mm.
Hologram : Sticker Stuck On Coupling.

Stainless Steel • Gun Metal • Aluminum Metal

No	Description	Material	Specification	Qty.
1.	LUG	Copper Alloy Stainless Steel	IS : 318 LTB-II SS-304/316	2
2.	Washer	Rubber	IS : 937	1
3.	Spring	Bronze Stainless Steel	IS : 7608	1
4.	Female Hale Coupling	Copper Alloy Stainless Steel	IS : 318 LTB-II SS-304/316	1
5.	Male Hale Coupling	Copper Alloy Stainless Steel	IS : 318 LTB-II SS-304/316	1

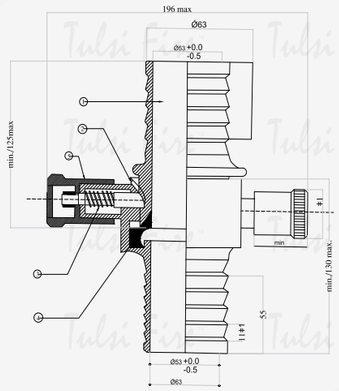

Fire Hydrant/Landing Valve

Stainless Steel
NTI-LV-TFLV-SS

IS : 5290
CM/L-8400178315

Gun Metal
Nti-lv-tflv-gm

Tulsi Fire Landing Valve : NTI-LV-TFLV

Technical Specifications

Size : 63mm / 75mm / 80mm
Inlet : 3" NB FLANGED
Outlet : Female Instantaneous
Material : Gun Metal / Stainless Steel
Conforming Specification : IS : 5290 Type - A, ISI Marked

Hydrostatic Test (body Test) : Tested At 23 Kgf/cm

Water Tightness (Seat Test) : Tested At 14Kgf/cm
Flow Test : 900 LPM Discharge at 7kgf/cm
Range : 38mm, 50mm
Hand Wheel : Grey Cast Iron
Body : Painted Fire Red Colour
Male Adopter & Accessories : Polished
Hologram : Sticker Stuck On Landing Valve

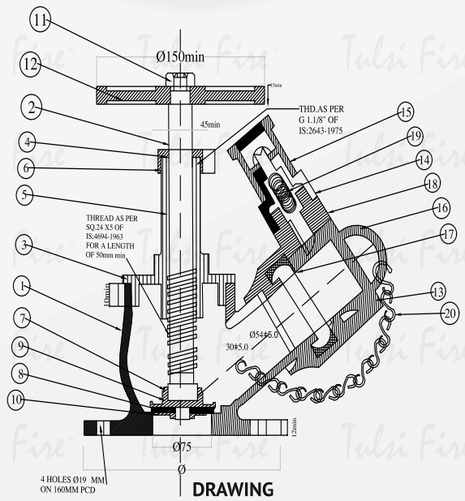

DRAWING

No	Description	Material
1.	Spindle	IS: 318 LTB-II & SS-304/316
2.	Gland Bush	IS: 318 LTB-II & SS-304/316
3.	Gland Packing	IS: 318 LTB-II & SS-304/316
4.	Check Nut (Spindle)	IS: 318 LTB-II & SS-304/316
5.	Seat Washer	IS: 318 LTB-II & SS-304/316
6.	Seat Check Nut	IS: 318 LTB-I & SS-304/316
7.	Hex. Nut	IS: 318 LTB-II & SS-304/316
8.	Lower Lug	IS: 318 LTB-II & SS-304/316
9.	Upper Lug	IS: 318 LTB-I & SS-304/316
10.	Blank Cap	IS: 318 LTB-I & SS-304/316
11.	Spring	IS: 318 LTB-II & SS-304/316
12.	Bonnet	IS: 318 LTB-II & SS-304/316
13.	Cam Tooth	Rubber IS : 937
14.	Stop Valve	Rubber IS : 937
15.	Gland Nut	Asbestose Rope
16.	Handle Wheel	M. S (Glavanized)
17.	Female Outlet	CI. IS : 210
18.	Rubber Ring	P.V.C.
19.	IS : 7608	IS : 7608
20.	Chain	Glavanized

Fire Aid Hose Reel Drum

Tulsi Fire-Aid Hose Reel Drum : NTI-FAHRD-TFHRD

IS : 884

CM/L-8400210360

IS-884 Type
NTI-FAHRD-TFHRDI

Malayasian Type
NTI-FAHRD-TFHRDM

Compact Type
NTI-FAHRD-TFHRDC

- Corrosion-Free Water Ways
- Compact space Design
- Red Powder Coated Finishing
- Operating Pressure - 12 Bar
- Available Hose-Rubber / Thermoplastic / PVC

Item Cosd	Hose Reel Material	Hose Diameter	Hose Lenght	Shut off Nozzle
HR-FT	Galvanized Steel Stainless Steel Gr. 304 Stainless Steel Gr. 316	¾	30 m.	PVC Gunmetal Stainless Steel
		1"	36 m.	
			40 m.	
		½	45 m.	

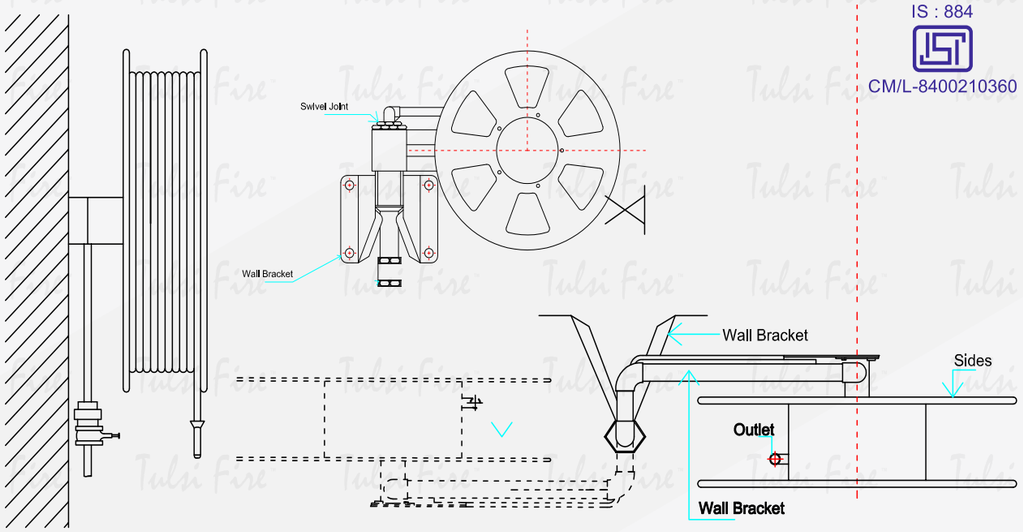

IS : 884

CM/L-8400210360

Fire Hose Reel/Shut off Nozzles/Fireman Axe

Tulsi Fire Hose Reel

Tulsi Fire Shut off Nozzle
Item Code : NTI-SON-TFSON

Tulsi Fire-Hose Reel : NTI-FAHRD-TFHR

Hose : Thermo Plasric Hose Pipe
Conforming Specification : IS : 12585, Type-2, ISI Marked
Application : This Thermo Plastic Hose is used for water delivery in Fire-Fighting Purpose.
Construction :
Lining : A flexible Thermoplastic lining, Smooth in bore.
Reinforcement : A Natural or Synthetic Testile
Reinforcement Cover : A flexible thermo plastic cover, which may have a smooth smooth or fluted finish as agreed to between the purchaser & the supplier. The colour may different from that of the lining.
Standard Length : 30 Mtrs & 36 Mtrs
Nominal Bore (ID) : 10.00 mm to 50.00 mm

Features :

- Compact, Flexible & Light weight
- Low Friction loss
- Ability to withstand high operating & back pressure

Tulsi Fire Man Axe : NTI-FMA-TFMA

Application :
Its primary use is for breaking down doors and windows & cut Electrical Wires in case of wire or Emergency.

Construction Material :

Axe Head	-	Made up from Forged Steel
Axe Handle	-	Made up from Steel
Handle	-	Heavily Insulated Rubber Handle Tested to 20000 Volts.
Handle Colour	-	Black
Handle Grip	-	Non-Slippery

Bod

Fire Inlet Breeching

2- Way Fire Inlet Breeching
NTI-FIB-TFIB2

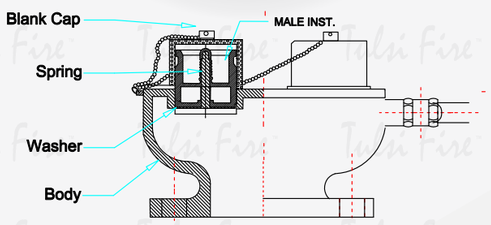

Tulsi Fire Inlet Breeching : NTI-FIB-TFIB

Technical Specifications:

Size : 63 mm

Inlet : 2/3/4 No's Male Instantaneous Adaptor (63 mm) with NRV

Outlet : 150 mm NB Flanged

Material :

Body : Cast Iron, Gun Metal & Stainless Steel

NRV : Gun Metal & Stainless Steel

Conforming Specification : IS : 904

Performance Test :

Hydrostatic Test (Body Test) : 21 Kgf / cm²

Water Tightness (Seat Test) : 7 Kgf / cm²

Finish :

Body : Painted Fire Red Colour

Male Adaptor : Polished

Hologram : Sticker stuck on body

3- Way Fire Inlet Breeching
NTI-FIB-TFIB3

4- Way Fire Inlet Breeching
NTI-FIB-TFIB4

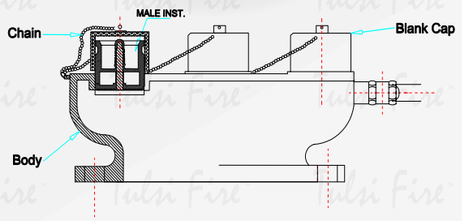

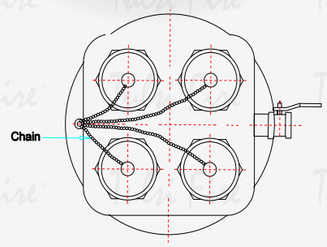

Fire Hose Cabinet / Fire Monitor

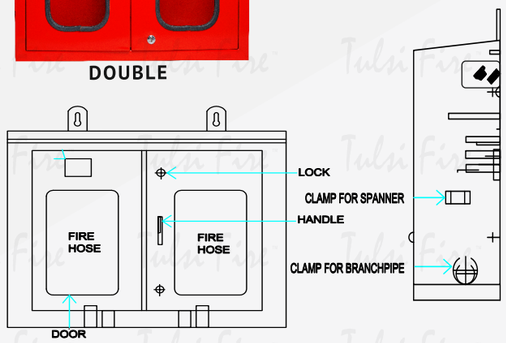

Tulsi Fire Hose Cabinet : NTI-FHC-TFHC

Body	N.S. Sheet 16 to 18 SWG / SS 304 Sheet
Glass	Transparent, 3 mm thick
Lock Type	Industrial panel lock (with Key Holder)
Handle	Chromium Plated
Finish	External - 2 coats of Anticorrosive Fire Red Paint Internal - 2 coats of White paint

Dimensions

Single Hose Cabinet : 450mm x 450mm x 200mm, Double Hose Cabinet : 750mm x 600mm x 250mm

Note : For Accommodating Type B Hoses, Slightly larger Size of cabinet are recommended

Single Hose Cabinet : 600mm x600mm x250mm
Double Hose Cabinet : 900mm x 600mm x 250mm
Hose Cabinet can be supplied with Mounting Stands/Brackets

Hose Cabinets can be supplied with Mounting Stands / Brackets

Tulsi Fire Stand Post Type Water Monitor : NTI-SPTWM-TFSPTWM

Technical Specifications	
Design & Construction	As Per IS : 8442
Material	Seamless Mild Steel Tubes
Size of Monitor	63 mm
Size of Inlet Flange	80 mm
Construction	Welded from M.S. Seamless Pipes, Bends, etc.
Discharge Capacity	1750 LPM
Horizontal Throw	50 - 55 Meters
Rotation	360
Elevation	85 to 30
Joint	Swivel Type (Gun-Metal)
Jet Spray Nozzle	Gun Metal or Aluminium
Operative Pressure	0.7 N/mm at Nozzle End
Leakage Pressure	To withstand a pressure of 2.3 N/mm²

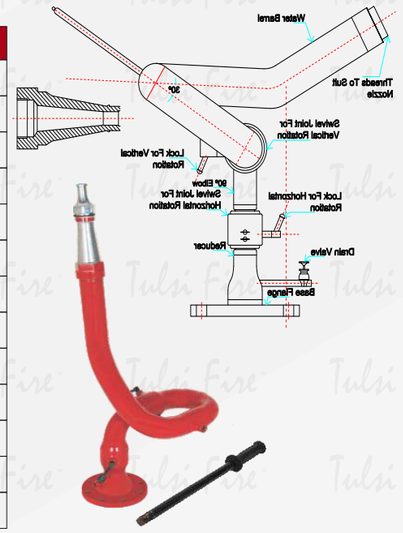

Fire Extinguisher (Powder Type)

Tulsi Fire Multipurpose Dry Powder Type : NTI-FEP-TFEP

IS : 15683 : 2006

CM/L-8400210006

1 kg. 2 kg. 4 kg. 6 kg. 9 kg.

Suitable For Class A, B, C & D Fires Involving Combustible Material Like Wood Paper, Cloth Flammable Gas Liquid Petrol, Paints Solvents & Electricity Started Fires & All Classes of Fire

DESCRIPTION	BIS Spec.	Discharge Time (Sec.)	Jet Lenght (Meters)	Test Pressure Kgf/cm²
ABC - 1 Kg.	15683	6-8	2-3	35
ABC - 2 Kg.	15683	6-8	2-3	35
ABC - 4 Kg.	15683	6-8	6-7	35
ABC - 6 Kg.	15683	10-12	6-7	35
ABC - 9 Kg.	15683	12-18	6-7	35

DESCRIPTION	BIS Spec.	Discharge Time (Sec.)	Jet Lenght (Meters)	Test Pressure Kgf/cm²
ABC - 1 Kg.	15683	6-8	2-3	35
ABC - 2 Kg.	15683	6-8	2-3	35
ABC - 4 Kg.	15683	6-8	6-7	35
ABC - 6 Kg.	15683	10-12	6-7	35
ABC - 9 Kg.	15683	12-18	6-7	35

IS : 15683 : 2006

CM/L8400210006

Available in MAP 90%

4 kg. 6 kg. 9 kg.

Fire Extinguisher (Gas Type)

Tulsi Fire Extinguisher (Co2 Type) : NTI-CO2-TFCO2

DESCRIPTION	BIS Spec.	Discharge Time (Sec.)	Jet Lenght (Meters)	Test Pressure Kgf/cm²
CO_2 - 2 Kg.	15683	8-16	2	236
CO_2 - 2 Kg.	15683	10-18	2	236
CO_2 - 2 Kg.	15683	10-18	2.5	236

IS : 15683 : 2006

CM/L-8400210006

Suitable For Class B & C Fires Involving Flammable material like Liquid Petroleum Products, Flammable Gases. Also work effectively and Rapidly on Plastics & Electrical Fires.

Fire Extinguisher (Foam Type)

Tulsi Fire Mechanical Foam (AFFF) Type : NTI-MF-TFMF

DESCRIPTION	BIS Spec.	Discharge Time (Sec.)	Jet Lenght (Meters)	Test Pressure Kgf/cm²
AFF-6Ltr.	15683	40-50	6-8	35
AFF-9Ltr.	15683	40-60	6-5	35

Advanced in Foam Technology Suitable for Class A & B Fires Involving Flammable Liquid, Petroleum Products or where the Blanketing Effect is Essential.

IS : 15683 : 2006

CM/L-8400210006

Fire Extinguisher

Tulsi Fire Dry Chemical Powder (Gas Cartridge) Extinguisher : NTI-DCP-TFDCP

Suitable For Class B Fires Involving Material Like Fabric, Oil Gases, Electric & Delicate Machineries.

IS : 15683 : 2006

CM/L-8400210006

Also Available in ABC Powder - IS: 4308 & Potassium Powder - IS: 4308

Description	BIS Spec.	Discharge Time (Sec.)	Jet Lenght (Meters)	Test Pressure Kgf/cm²	Gas Gart. Used
DCP-4Kg.	15683	14-16	6-8	35	120gms
DCP-6Kg.	15683	16-18	6-8	35	120/200gms
DCP-9Kg.	15683	20-24	6-8	35	120/200gms

Tulsi Fire Water Co2 Type Extinguisher (Gas Pressure & Gas Carttridge)

NTI-WCO2-TFWCO2

IS : 15683 : 2006

CM/L-8400210006

Suitable For Class A Fire Involving Combustible Material of Organic Nature Such as wood, Paper, Textile, Jute & Many Other Goods Etc.

Capacity (Ltrs.)	Discharge Time (Sec.)	Jet Lenght (Meters)	Jet Lenght (Meters)	Test Pressure Kgf/cm²	Gas Cartridge Used/Cylinder
W/CO2 6 Ltr	15-20	6-8	95%	35	60gms
W/CO, 9 Ltr	20-25	6-8	95%	35	60gms

Tulsi Fire Water Type Extinguisher (Gas Pressure & Gas Carttridge)

NTI-W TFW

IS : 15683 : 2006

CM/L-8400210006

Suitable For Class A Fire Involving Combustible Material of Organic Nature Such as wood, Paper, Textile, Jute & Many Other Goods Etc.

Capacity (Ltrs.)	Discharge Time (Sec.)	Jet Lenght (Meters)	Jet Lenght (Meters)	Test Pressure Kgf/cm²	Gas Cartridge Used/Cylinder
W/CO2 6 Ltr	15-20	6-8	95%	35	60gms
W/CO, 9 Ltr	20-25	6-8	95%	35	60gms

Automatic Sprinkler/ Other Product

Tulsi Fire-Automatic Sprinkler : NTI-AS-TFAS

PENDENT TYPE SPRINKER

Temprature Rating	: 155˚F/68˚C
Glass Blub Colour	: Red
Thread Size	: NPT1/2" OR R1/2"
Max. Service Pressure	: 175psi
Glass Bulb Diamenter(mm)	: 05 / 03
Response	: SR / QR

SIDEWALL TYPE SPRINKLER

Temprature Rating	155˚F/68˚C
Glass Blub Colour	Red
Thread Size	NPT1/2" OR R1/2"
Max. Service Pressure	175psi
Glass Bulb Diamenter(mm)	05 / 03
Response	SR / QR

CONCEALED TYPE SPRINKLER

Temprature Rating	155˚F/68˚C
Glass Blub Colour	Red
Thread Size	NPT1/2" OR R1/2"
Max. Service Pressure	175psi
Glass Bulb Diamenter(mm)	05
Response	SR

UPRIGHT TYPE SPRINKLER

Temprature Rating	: 155 F/68 C˚
Glass Blub Colour	: Red
Thread Size	: NPT1/2" OR R1/2"
Max. Service Pressure	: 175psi
Glass Bulb Diamenter(mm)	: 05 / 03
Response	: SR / QR

Other Products :

AIR RELEASE VALVE

FIRE BELL

FIRE HYDRANT ADOPTER

BUTTERFIL VALVE (MANUAL TYPE)

MULTIPURPOSE NOZZLE

DUAL PLATE WAFER CHECK VALVE

SINGLE PLATE WAFER CHECK VALVE

FOG NOZZLE

TRIPLE PURPOSE NOZZLE

DRAW OUT CONNECTIONS

FIRE BUCKET WITH STAND

MANUAL CALL POINT